Mastercam Training Video Series

Video 6
Programming the Second Side

worldskillsuk
excellence at work

Video Link

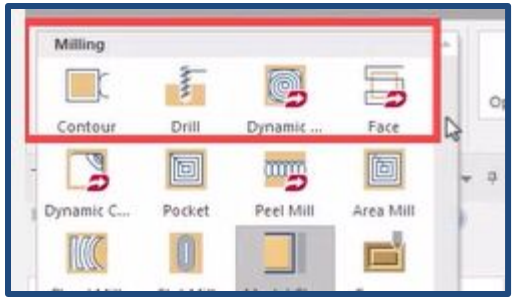

We will now program the second side toolpaths, following a similar strategy as Side One.
Start with a ‘Face’ toolpath found in the 2D Gallery

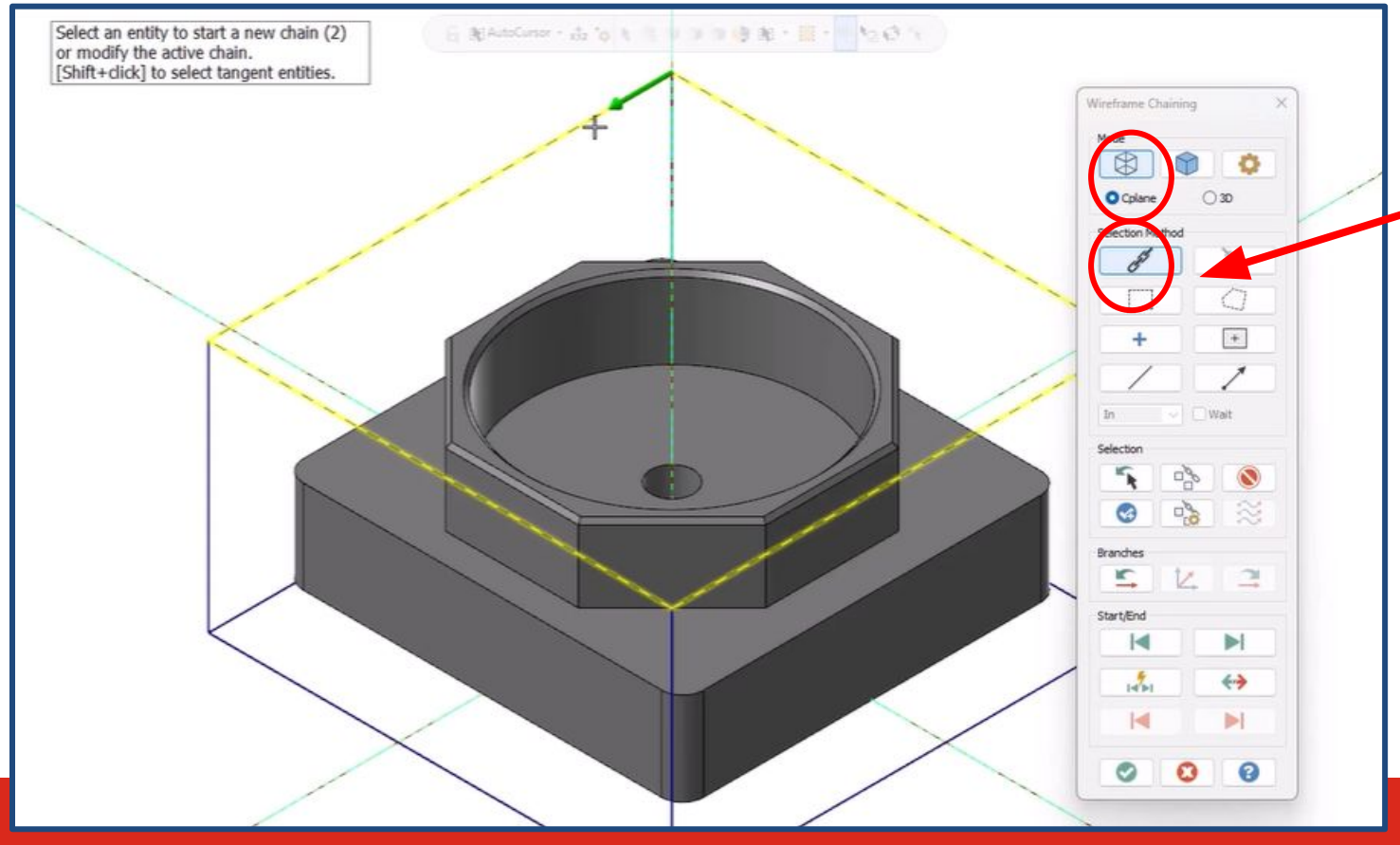

Using the wireframe chaining method, select the wireframe stock boundary as shown

Green Tick to accept and launch the ‘Face’ toolpath manager

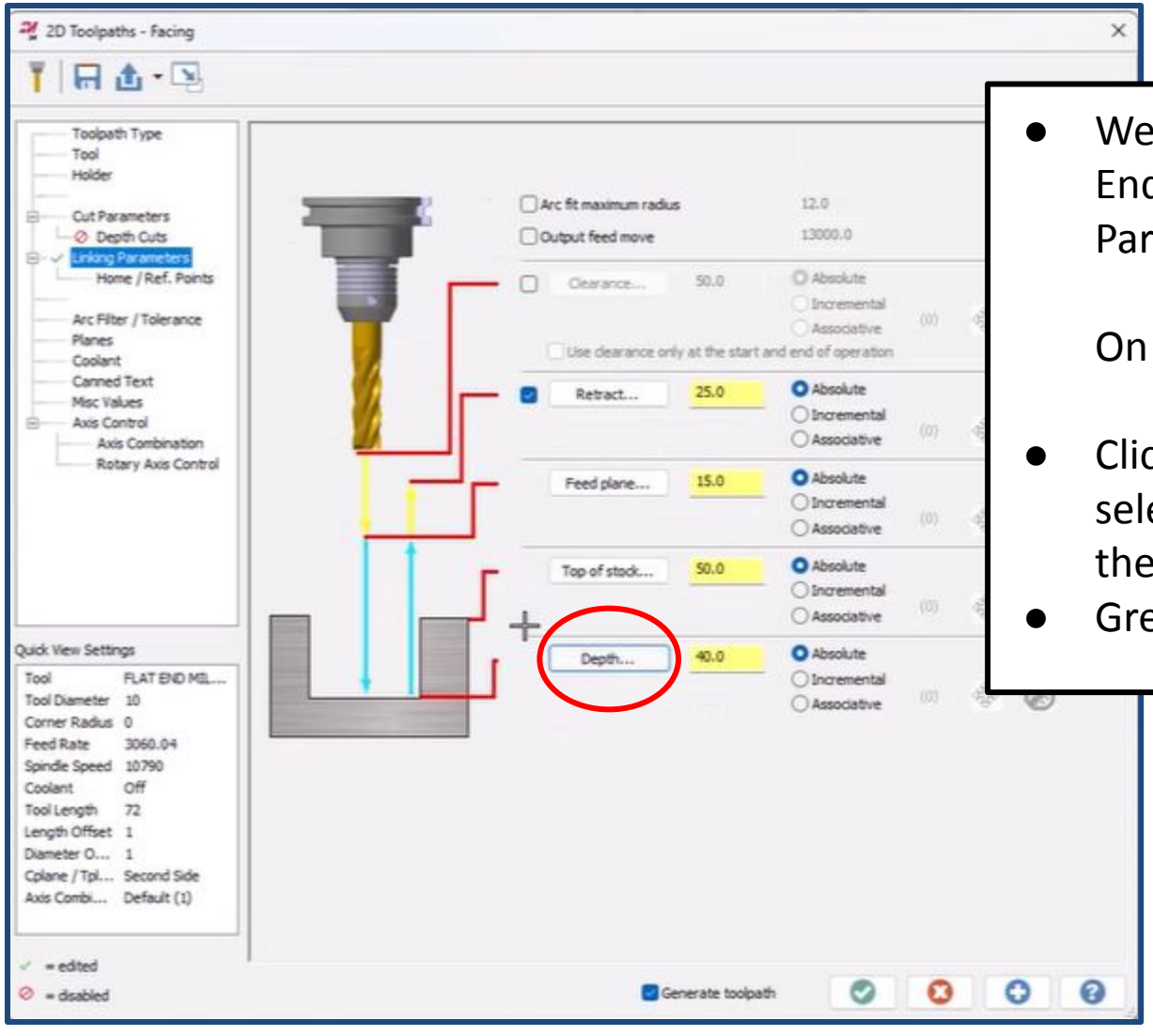

- We will use the same 10mm Flat End Mill and the same 'Cutting Parameters' as Side One

  On the 'Linking Parameters' page:

- Click the 'Depth' button and then select the top face of the part in the graphics window
- Green Tick to accept

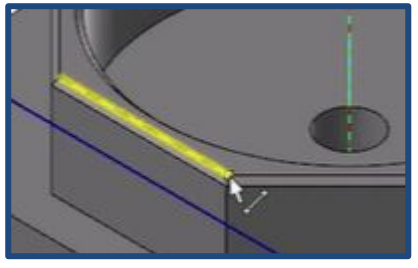

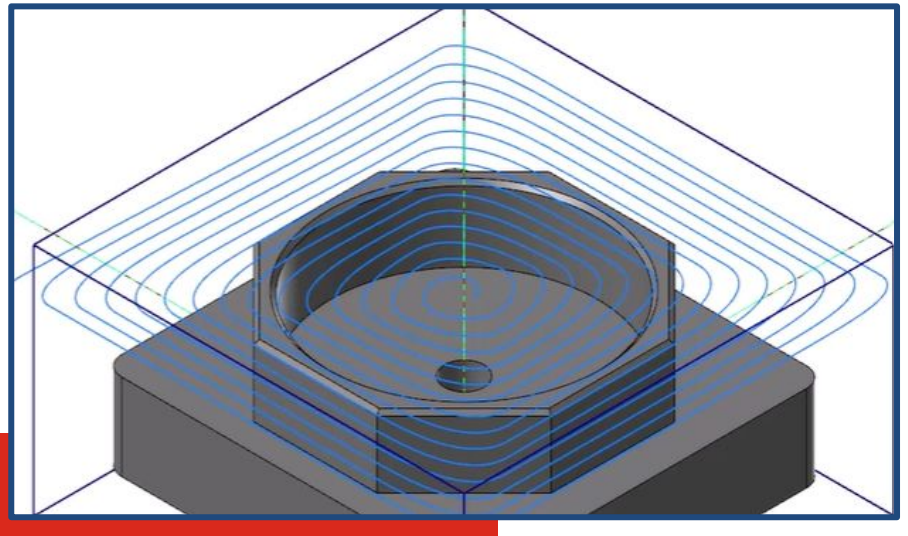

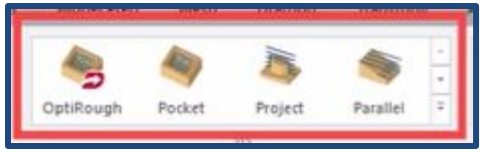

We will now use the ‘OptiRough’ Toolpath - found in the 3D toolpath gallery.

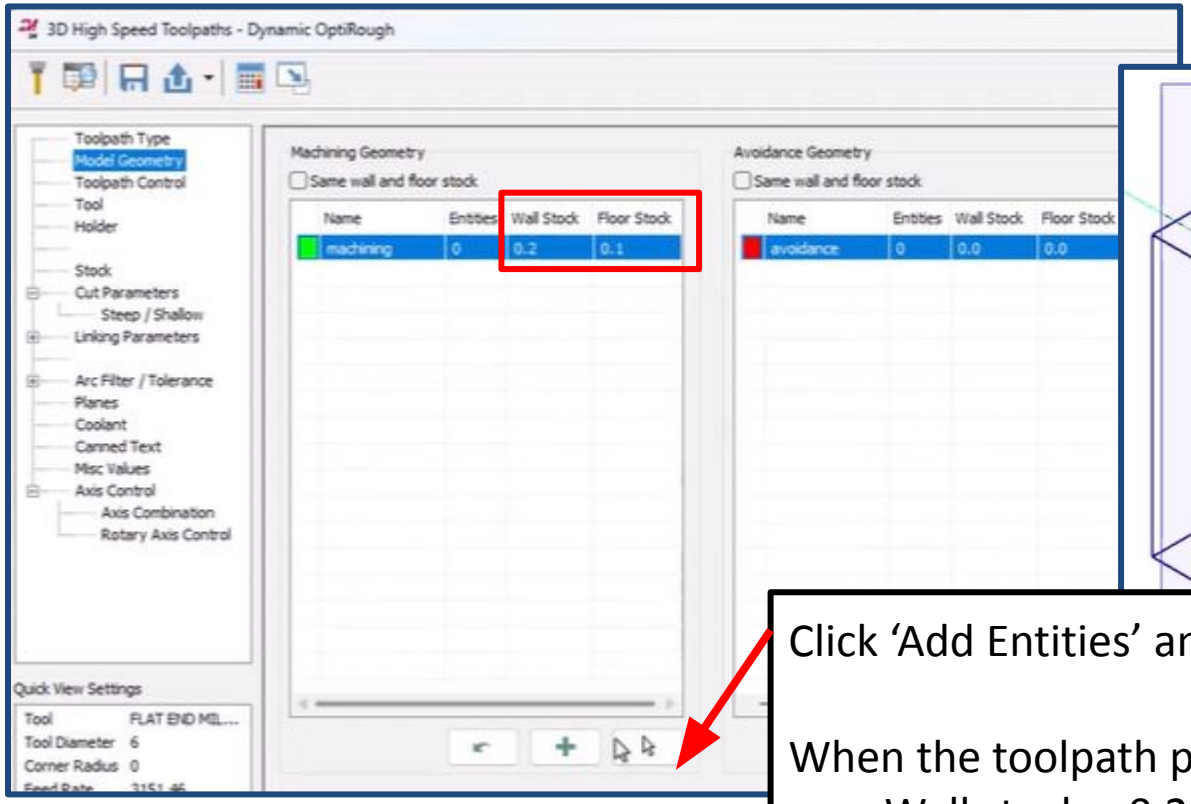

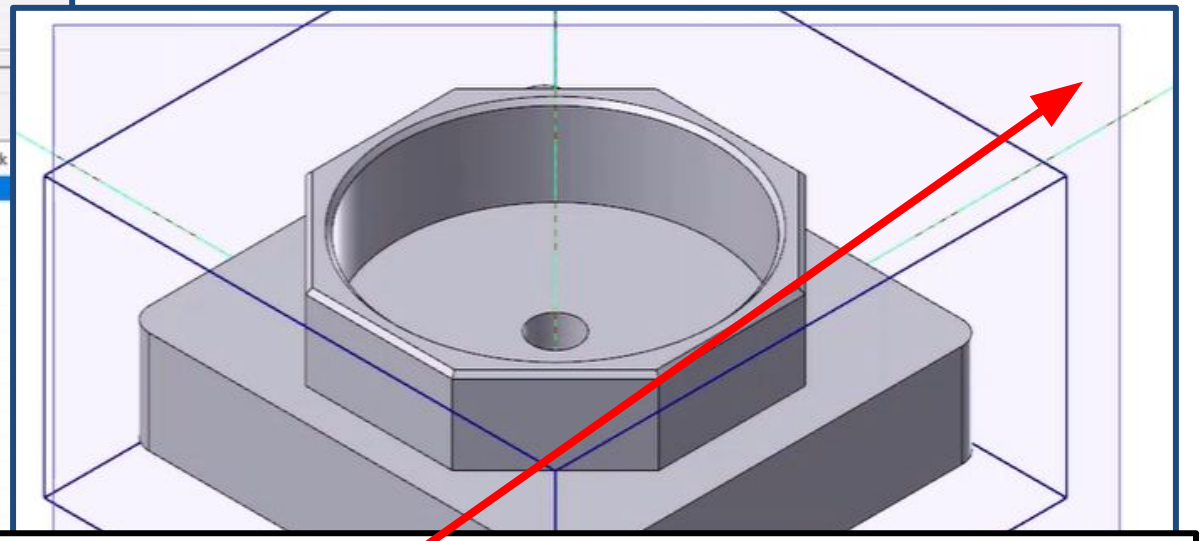

Click ‘Add Entities’ and then drag a box around to select the whole model

When the toolpath parameters page appears ensure

- Wall stock = 0.2mm
- Floor Stock = 0.1mm

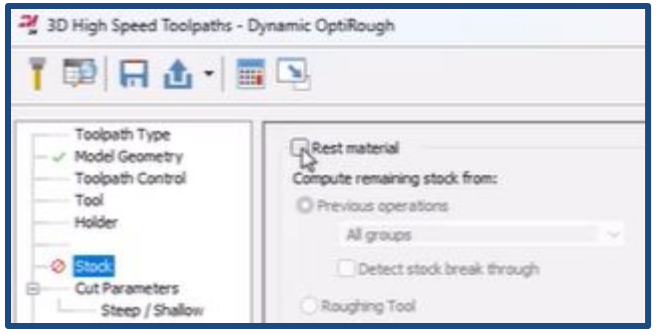

As this toolpath has settings have been saved from the previous use. Ensure 'Stock' machining is turned **'off'** by unticking the 'Rest Machining' box

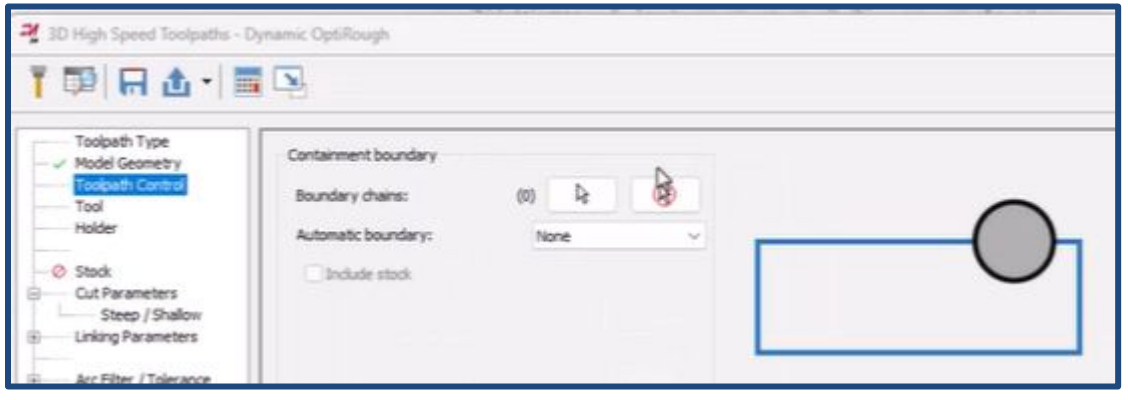

- Go to the 'Toolpath Control' page
- Select a 'Containment Boundary'

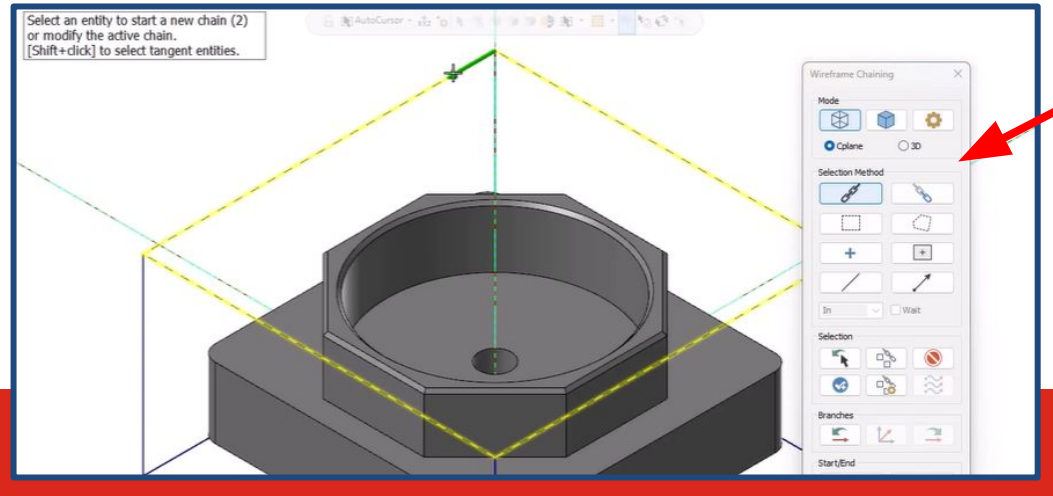

- Using wireframe chaining
- Select the 'Containment Boundary' as the wireframe stock boundary, as shown
- Ensure 'Strategy' is set to 'From Outside'

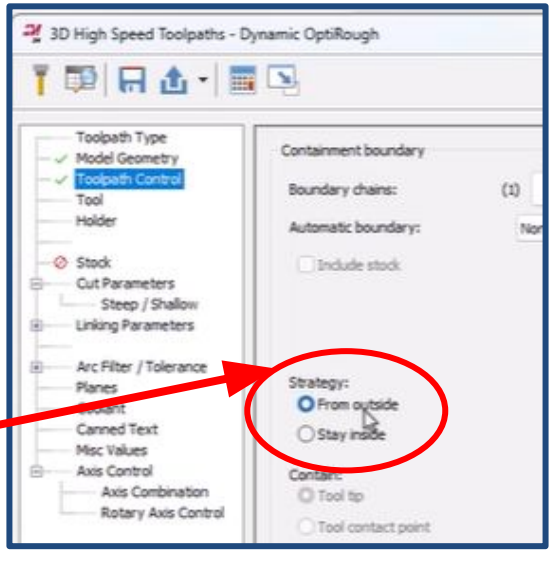

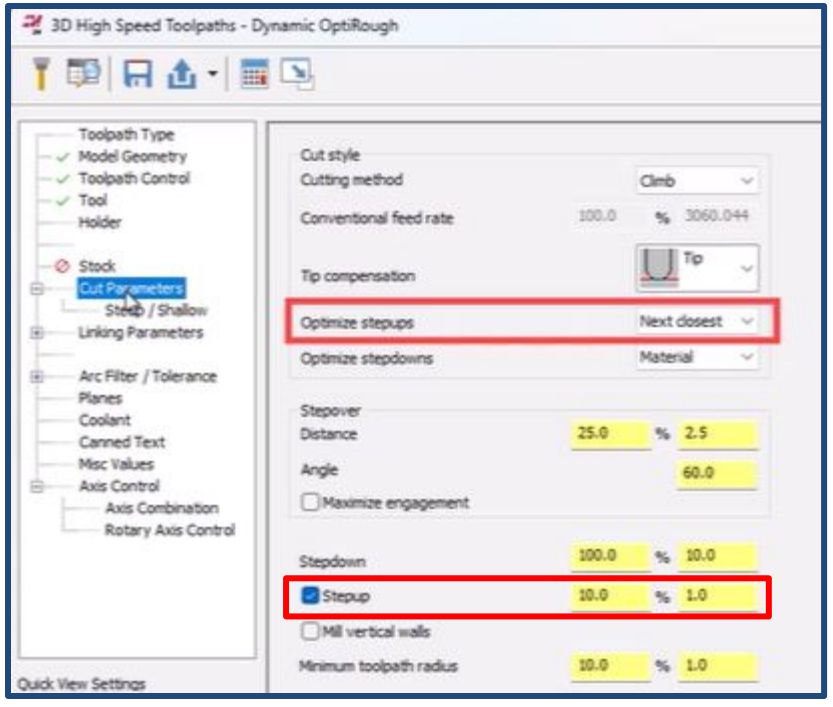

On the 'Cut Parameters' page

- Ensure 'Optimize step ups' is set to 'Next Closest'
- 'Step up' has been ticked and set to 10%

On the 'Steep / Shallow' page

- Ensure Min and Max depths have been selected
- Set Min Depth to +40.0
- Use the selection arrow tool to select the bottom edge as shown

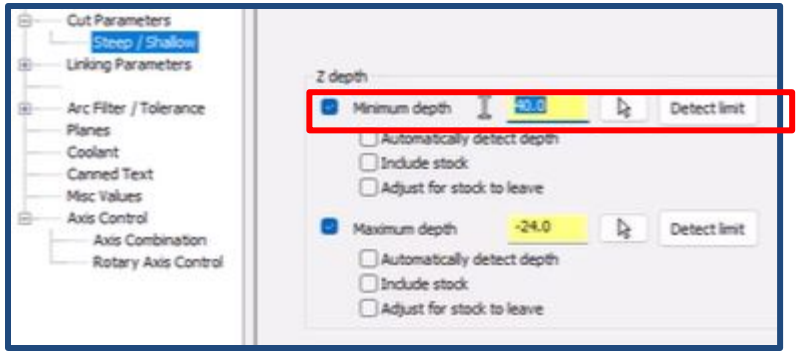

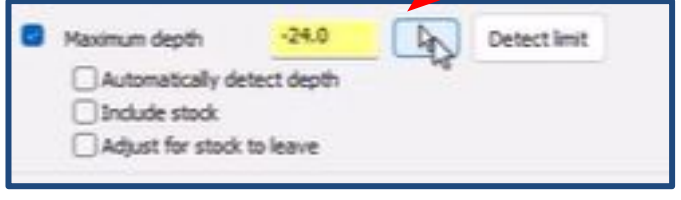

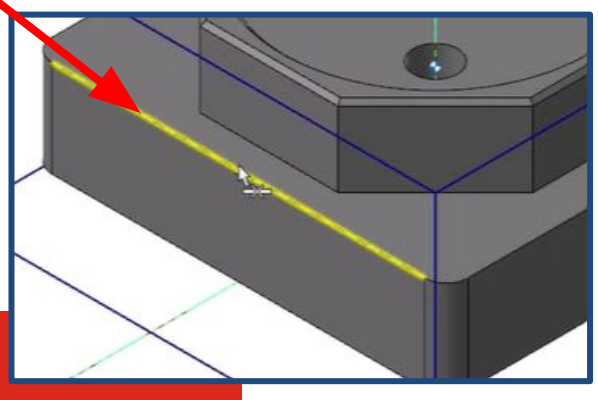

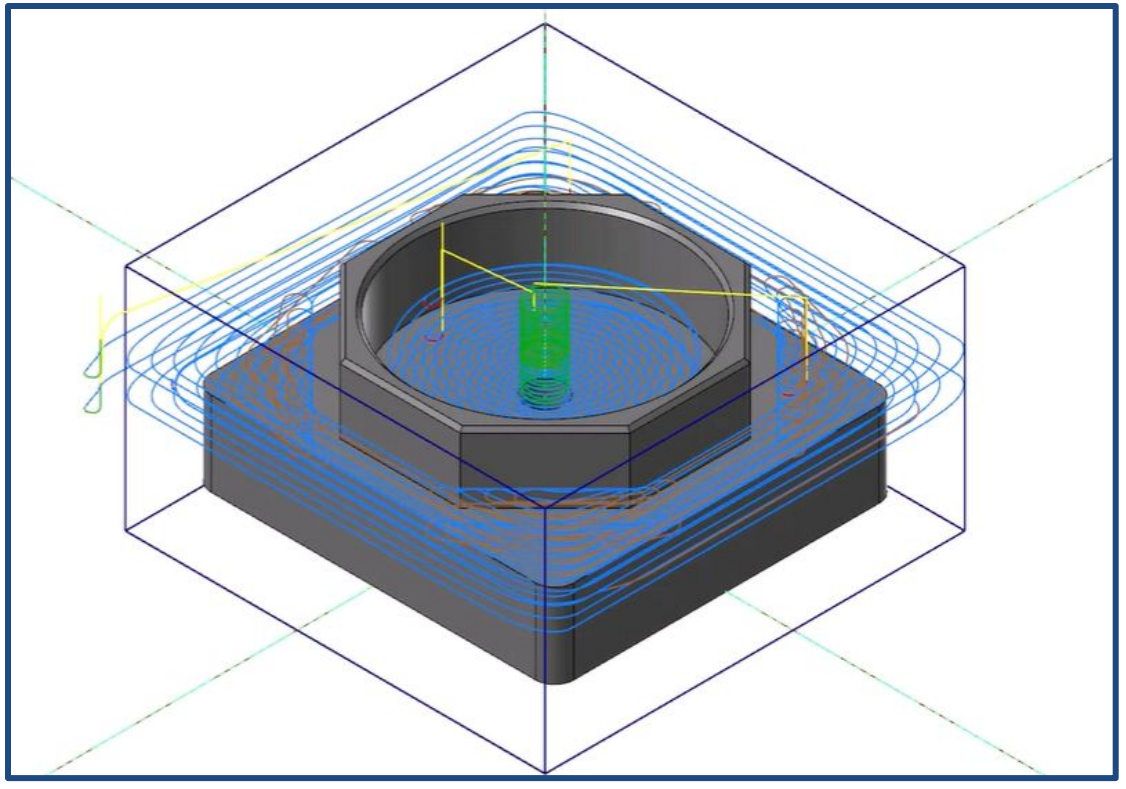

- Your OptiRough Toolpath should look similar to this

worldskillsuk
excellence at work

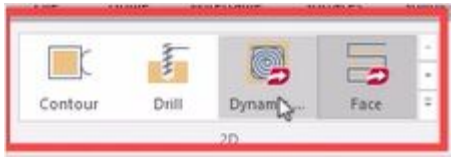

We will now use a 2D Dynamic toolpath to finish the outside floor area.
Select '2D Dynamic' from the 2D gallery

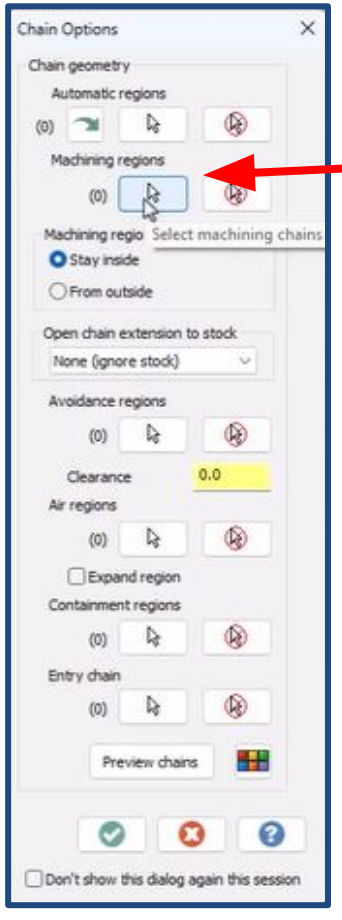

When the Chain options menu appears
Select 'Machining Regions'
Use the 'Solids' and 'loop' selection methods
On the graphics area select the outside edge of the face to machine

Press Green Tick to accept

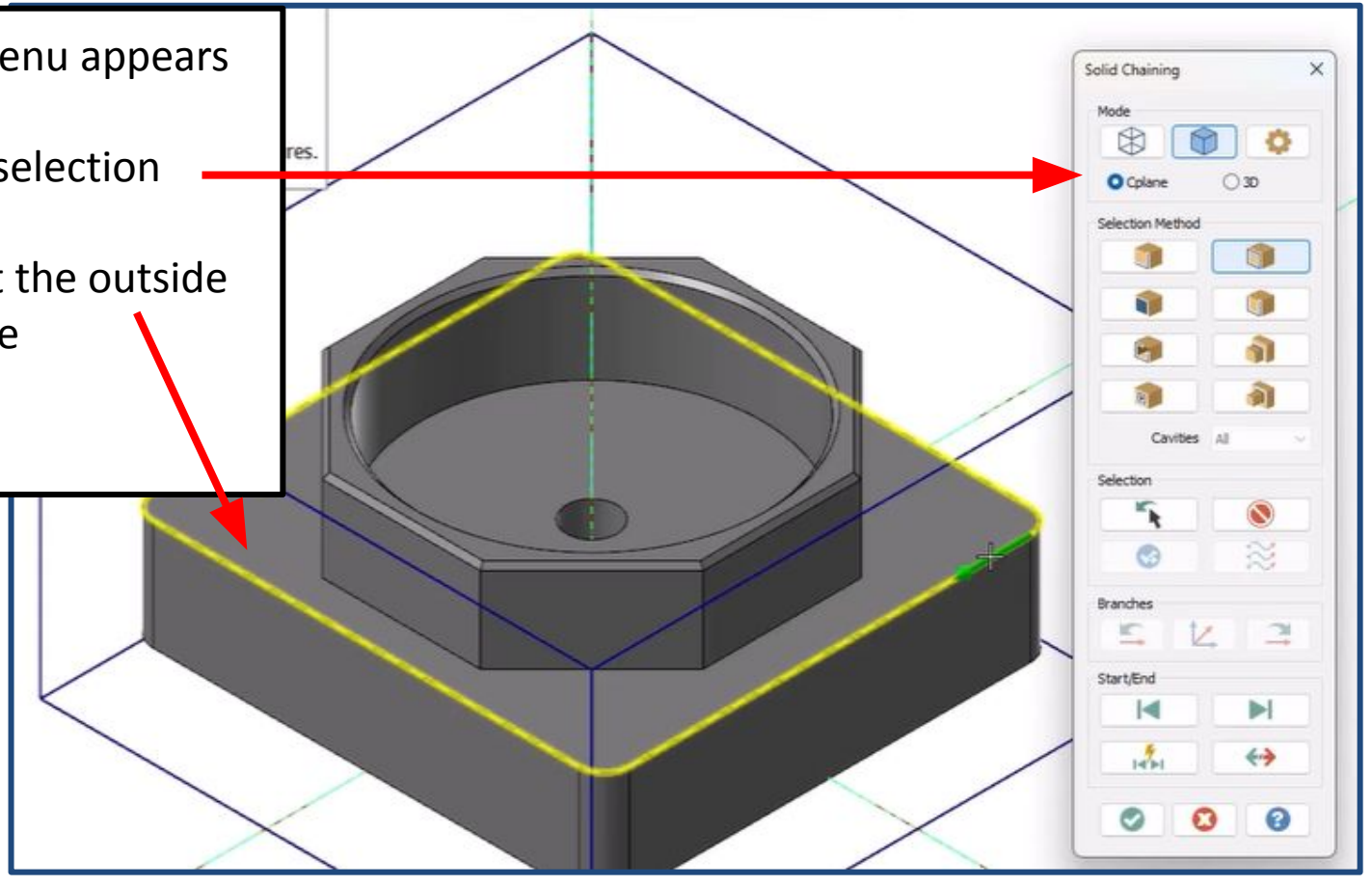

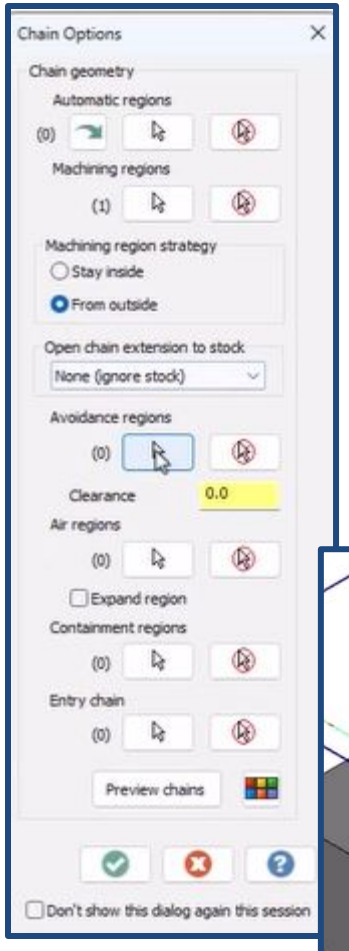

Now set ‘Machining Strategy’ to ‘Outside’

Select ‘Avoidance regions’ and using the same method as before select the bottom edge of the Octagon.

Green Tick to Accept

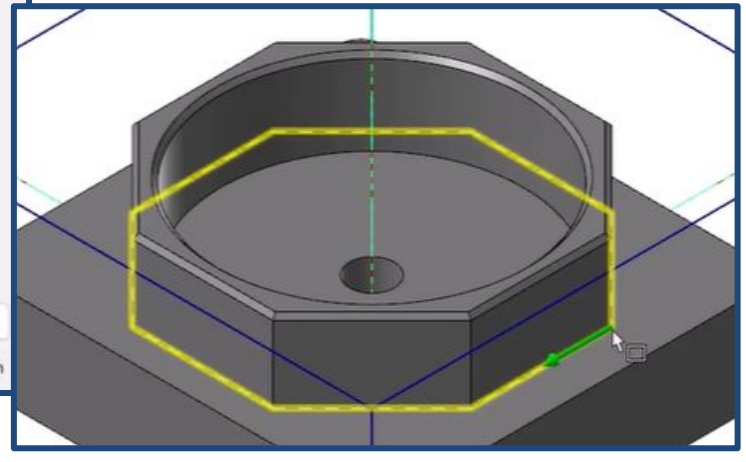

worldskillsuk
excellence at work

Back in the ‘Chain Options. Dialogue box
Select ‘Preview Chains’
The Red Hatched area will be the area where material will be removed.
The blue area is the area in which the cutter is free to move within.
Green Tick to Accept

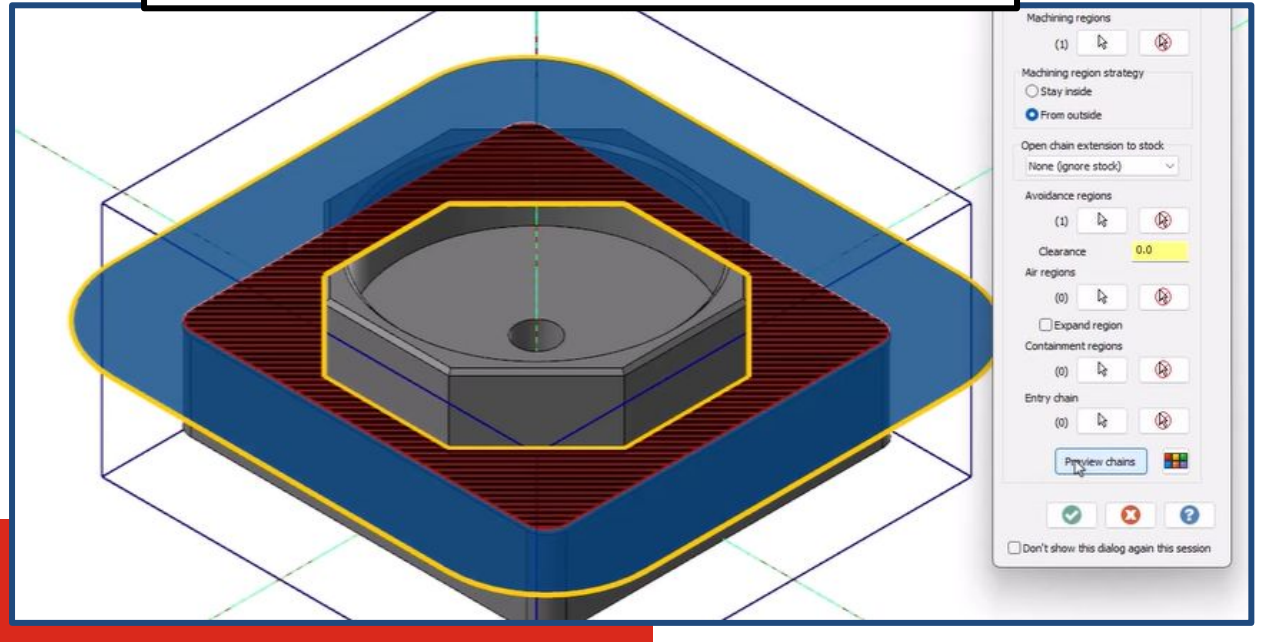

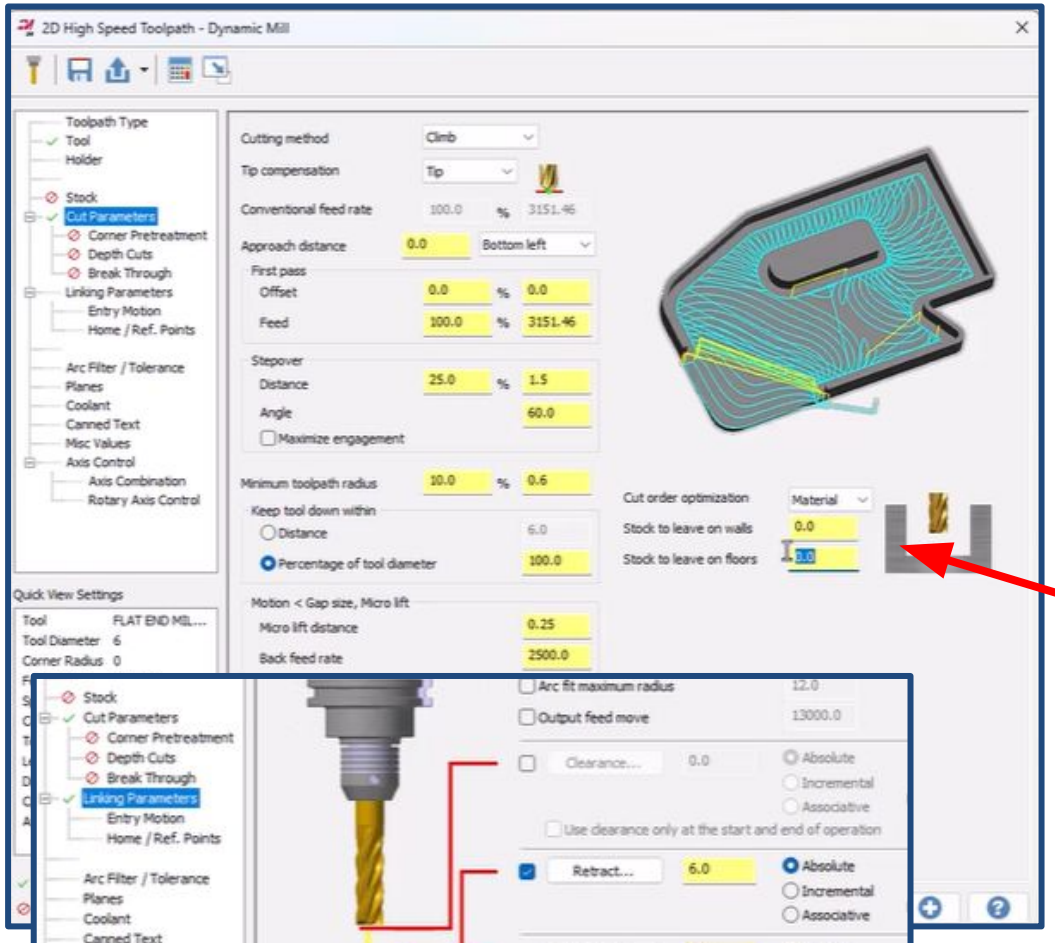

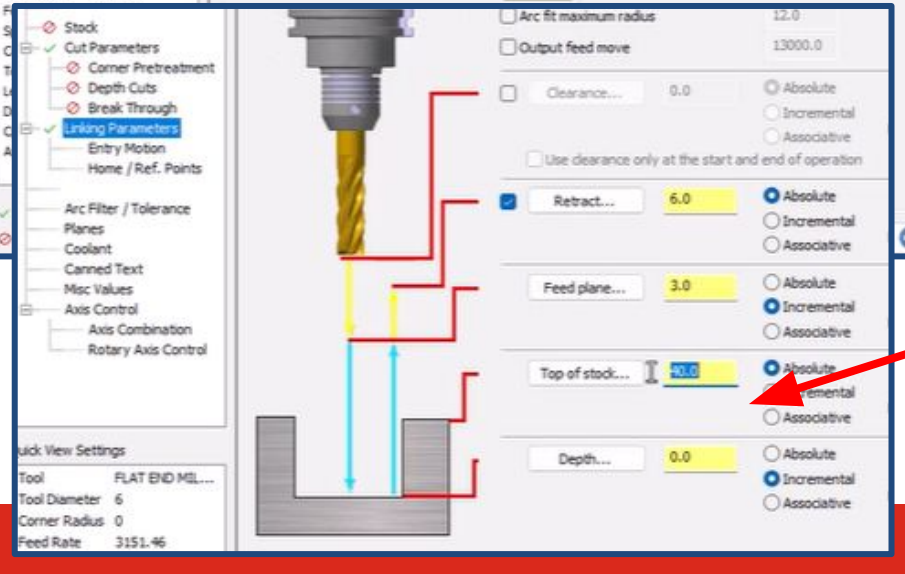

On the ‘Tool’ page select the 6mm Flat Endmill

On the ‘Cut Parameters’ Page
Check Step over

As this will be used as a finishing toolpath Set
‘Stock to Leave’ as:
0.0mm on Walls
0.0mm on Floors

On the ‘Linking Parameters’ Page set:
‘Top of Stock’ to +40.0mm Absolute
‘Depth’ to 0.0mm Incremental

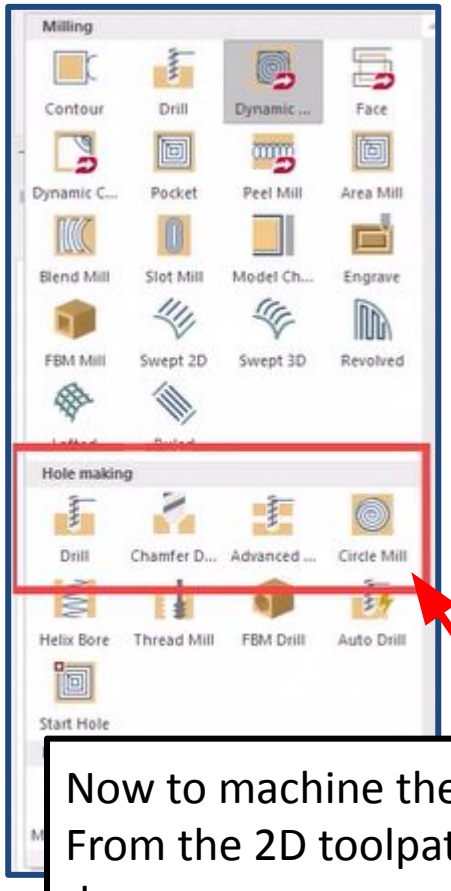

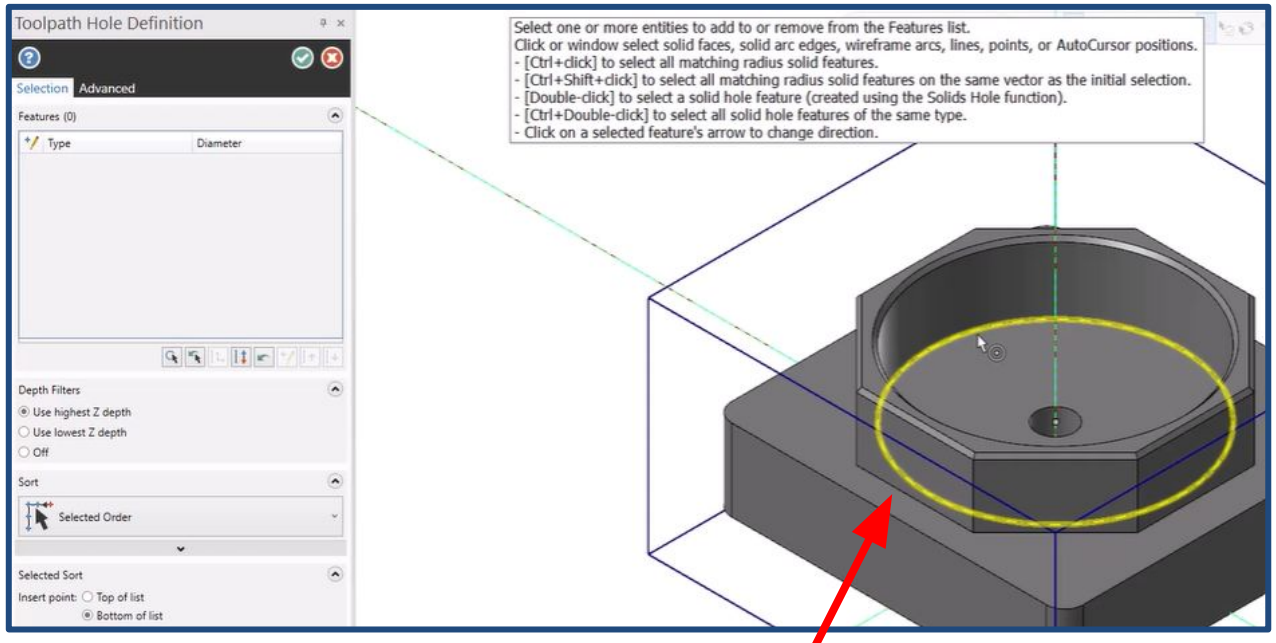

Now to machine the floor of the bore.
From the 2D toolpath gallery select the drop down menu
From the 'Hole Making' selection choose the 'Circle Mill' Toolpath.

The 'Toolpath Hole Definition' dialogue box appears
Now select the bottom edge of the large bore as shown
Green Tick to accept and leave this function panel.

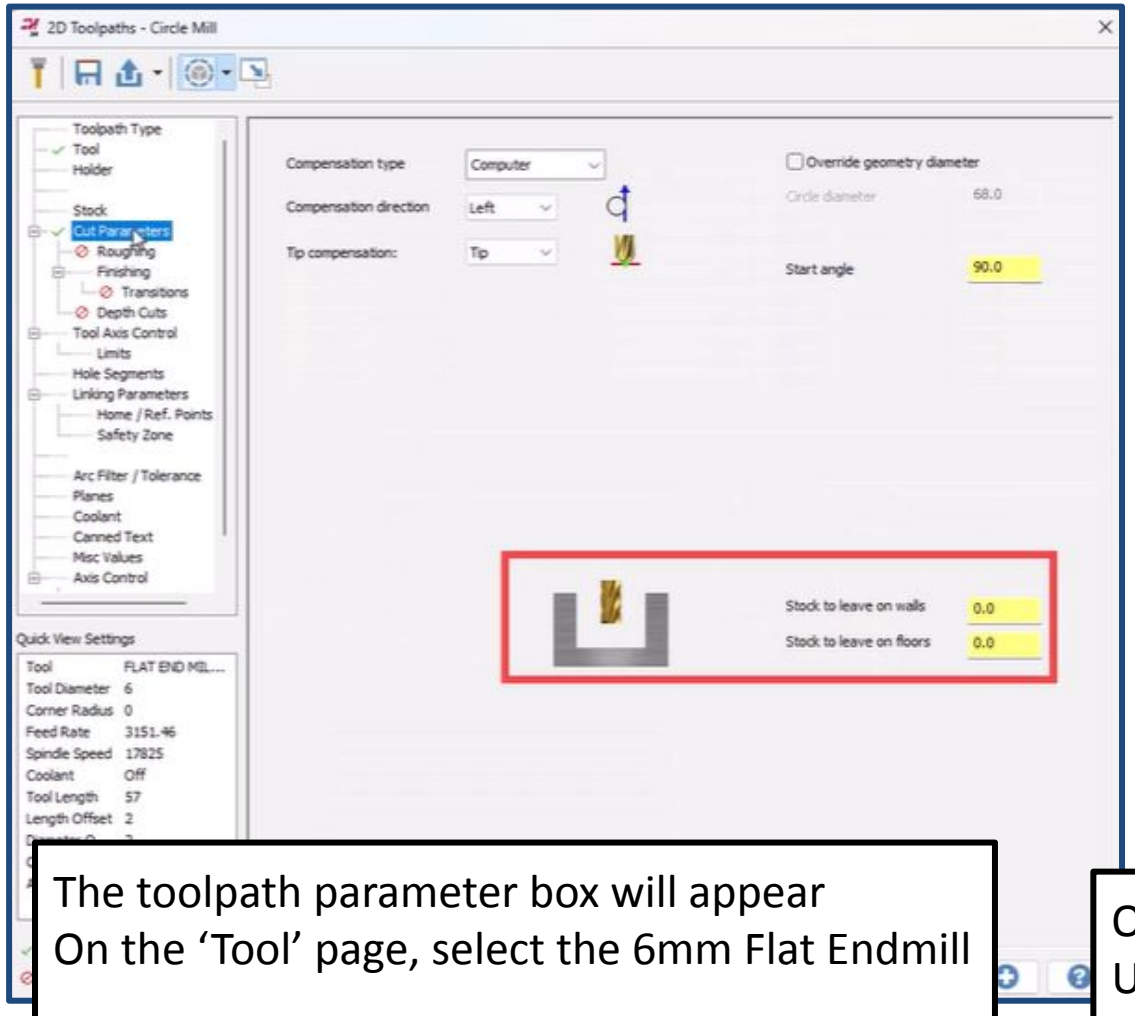

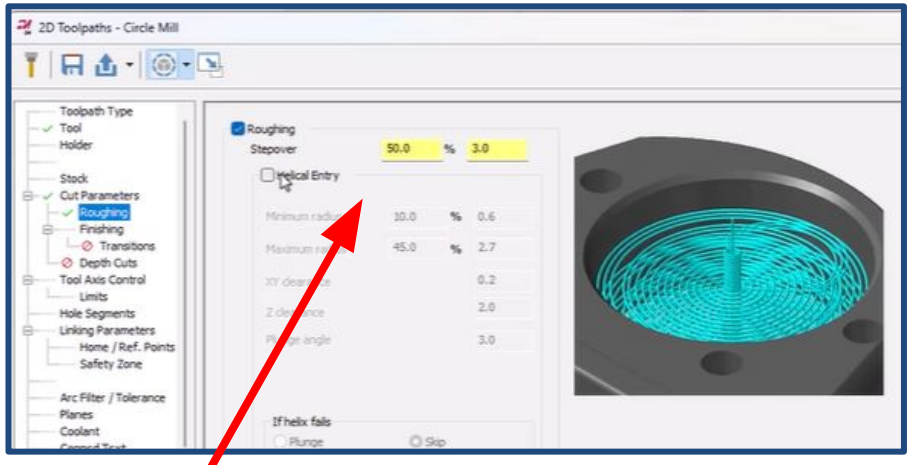

The toolpath parameter box will appear
On the ‘Tool’ page, select the 6mm Flat Endmill

On the ‘Cut Parameters’ page change ‘Stock to leave’ to 0.0mm on Walls and Floors

On the ‘Roughing’ page turn on Roughing a
Untick the ‘Helical Entry’ option - the part has already been roughed out using OptiRough, so we can go straight to depth on this toolpath.

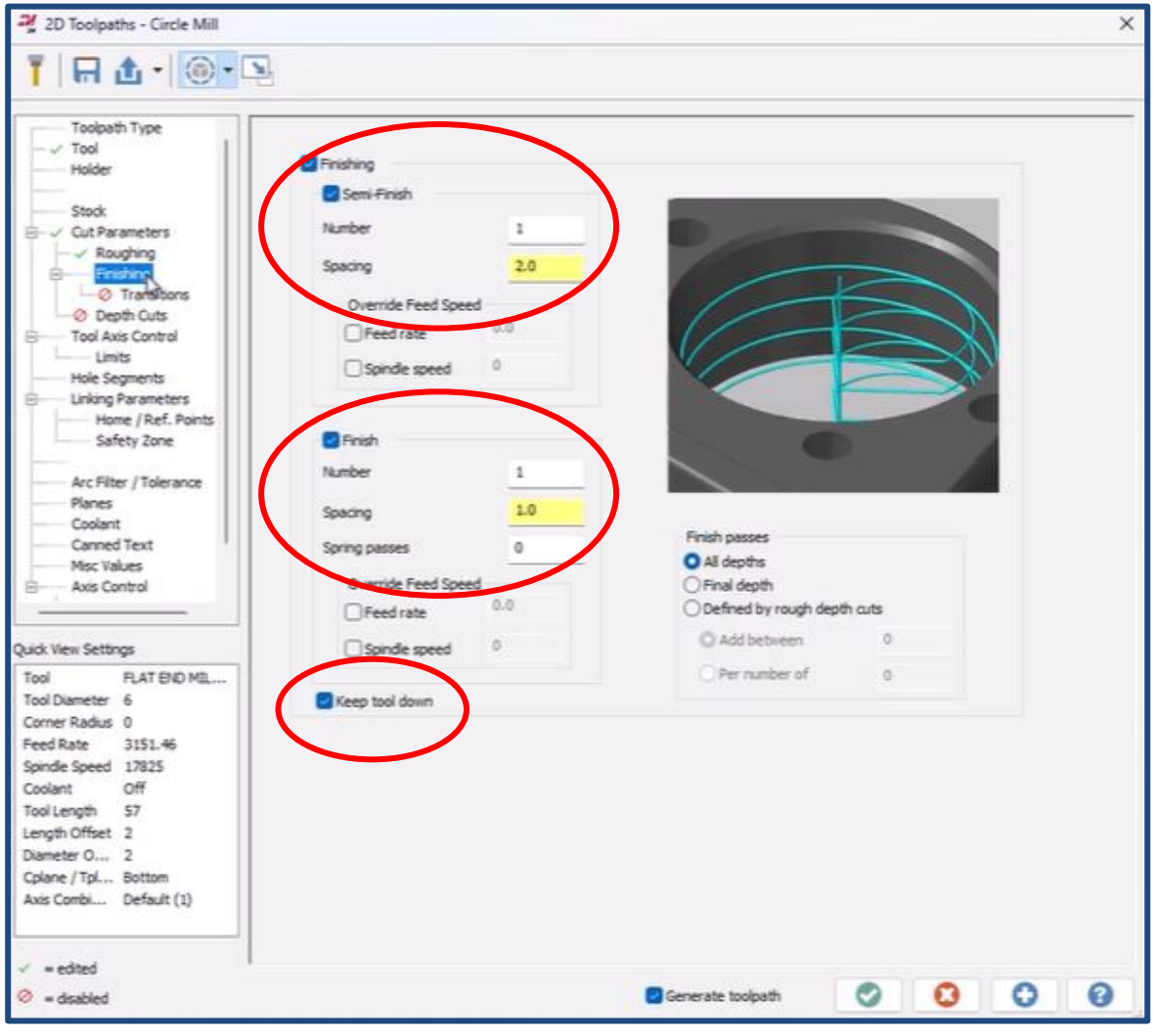

Select the ‘Finishing’ Page and set the parameters as needed, in this example: ‘Semi-Finish’ and ‘Finish’ turned on

Ensure the ‘Keep tool down’ check box is ticked to stop the tool retracting between passes.

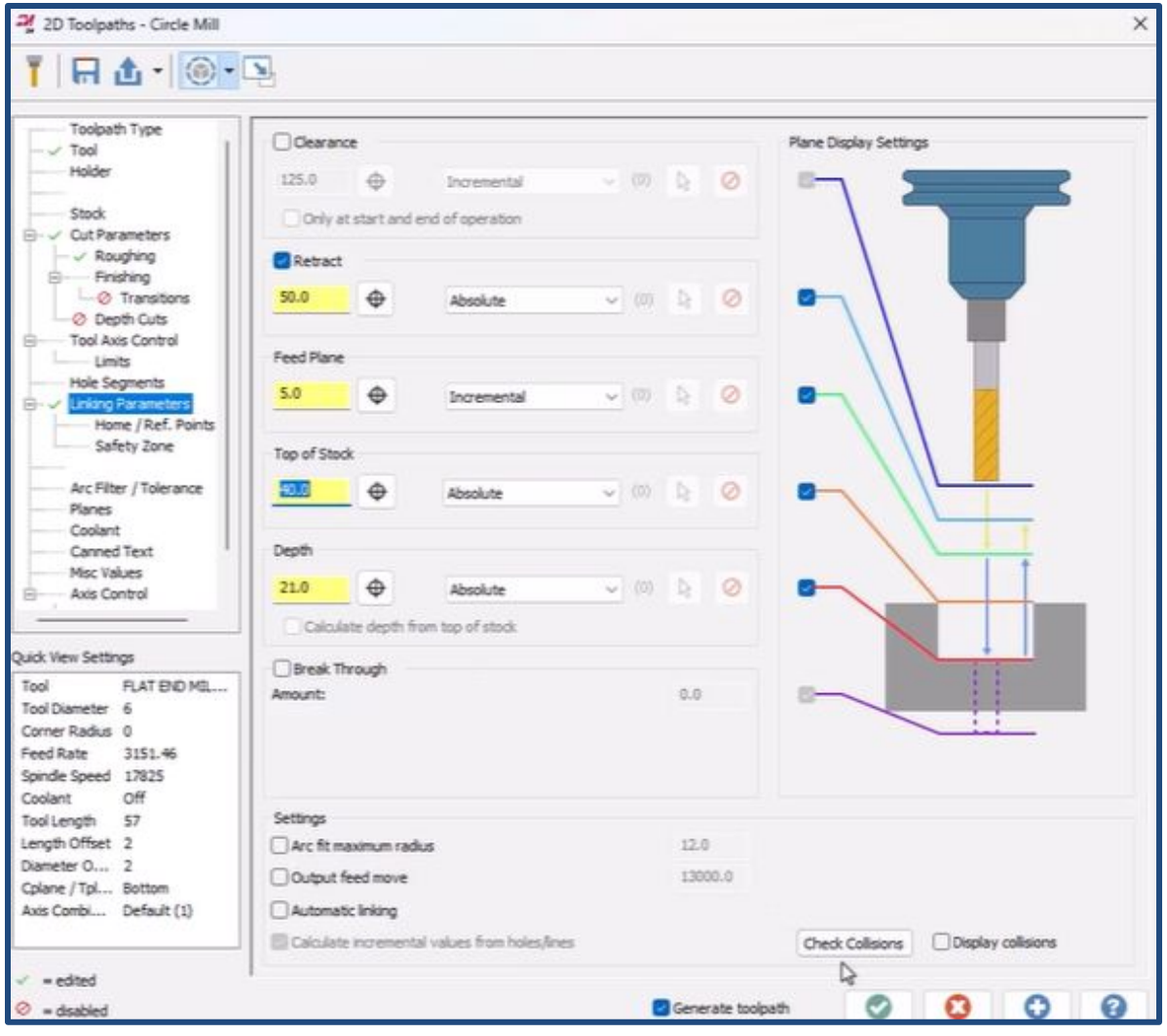

On the ‘Linking Parameters’ page

Set ‘Top of Stock’ to +40.0mm

‘Depth’ should be set by the solid model selection - in this example +21.0mm

Green tick to accept and generate toolpath

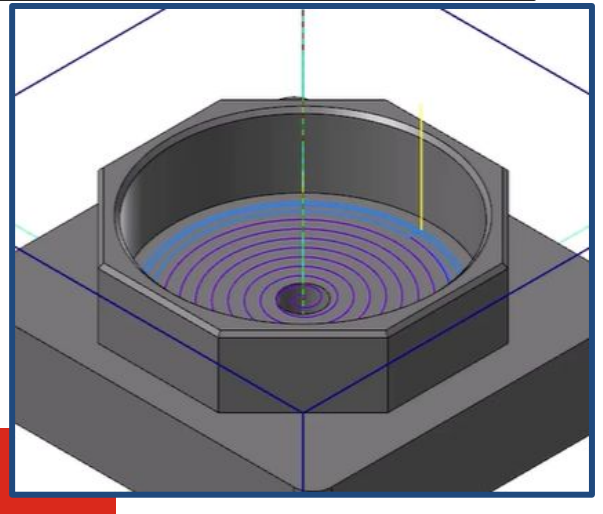

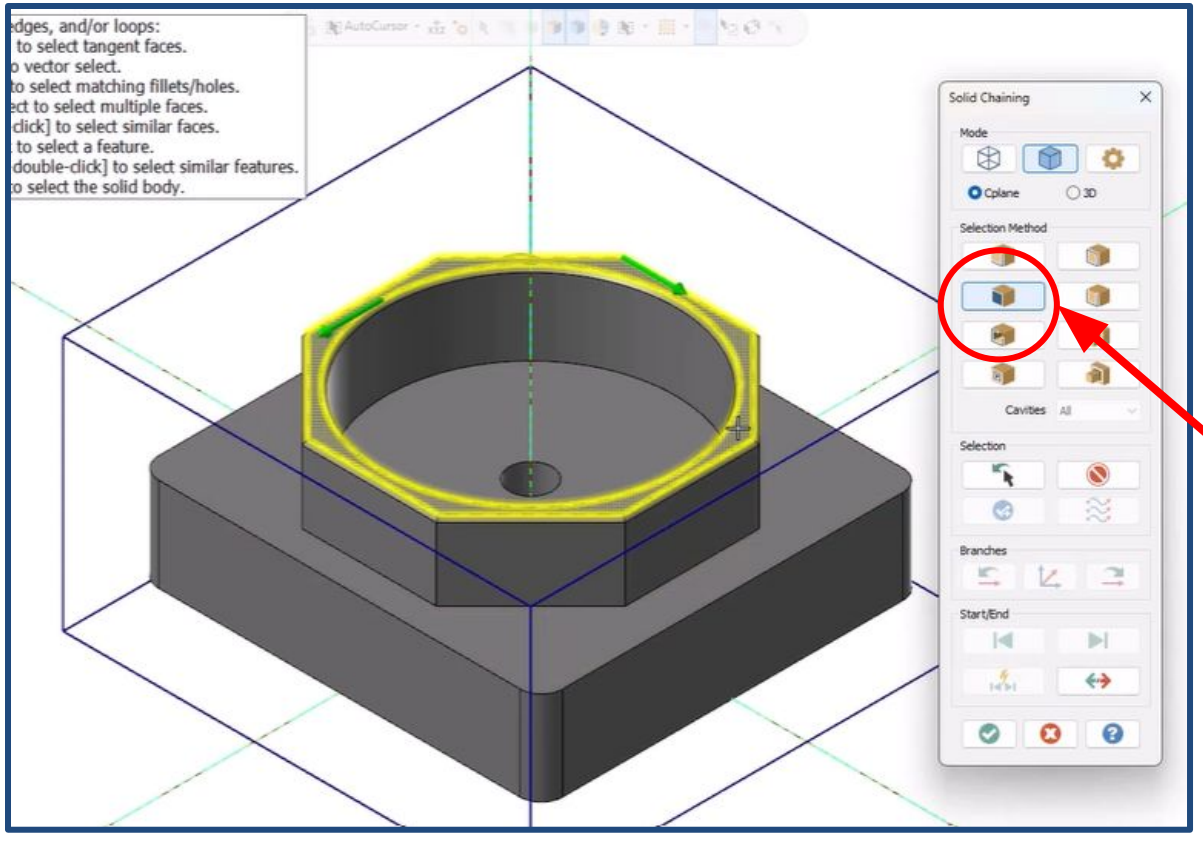

We will now create a chamfer using a different method
On the 2D gallery - Select ‘Contour’

On the Chaning manager
Turn off ‘Loop’
And select ‘Face’

Then select the top face of the part.
This has now selected the outside and inside edge to chamfer on the top face.

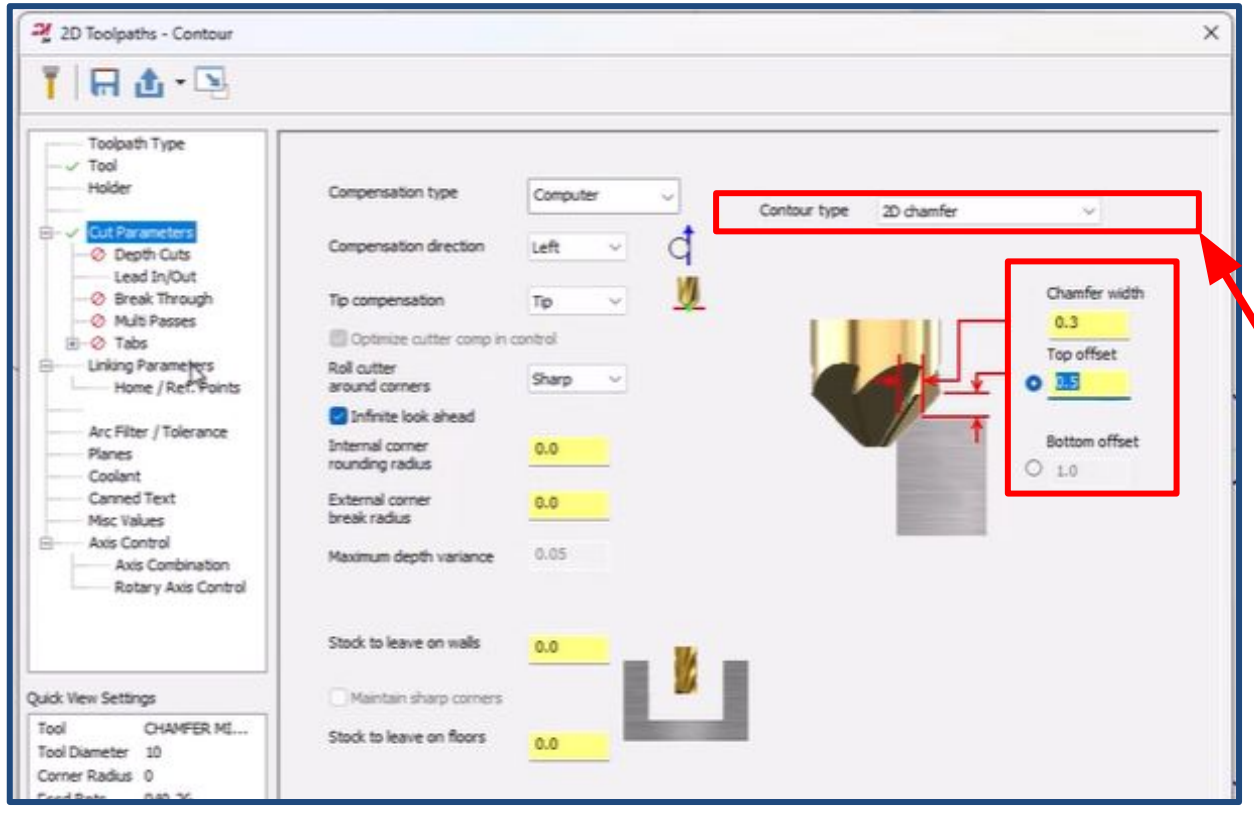

On the ‘Tool’ page select the Chamfer Tool
On ‘Cut Parameters’ use the drop down box and change the contour type to ‘2D Chamfer’

Then set:

- ‘Chamfer Width’ to 0.3mm
- ‘Top Offset’ to 0.5mm

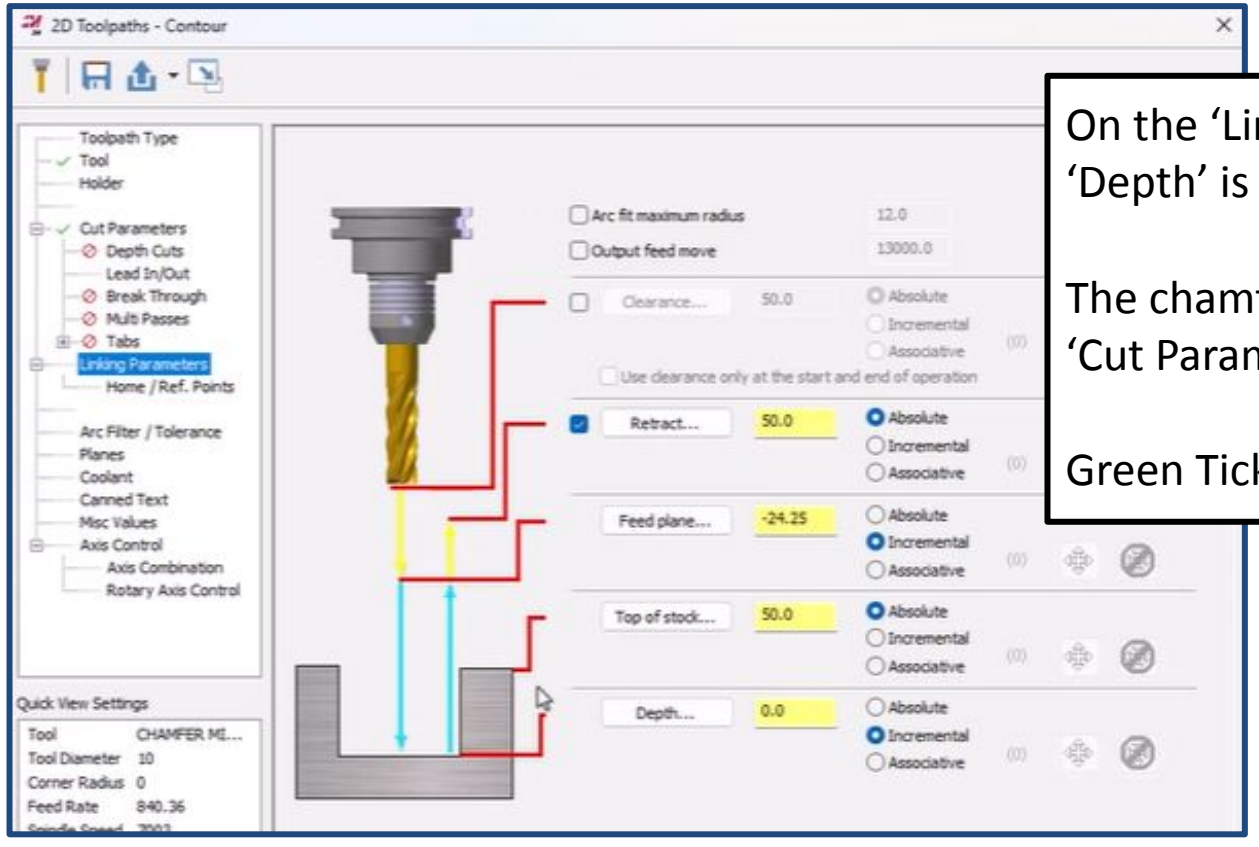

On the 'Linking Parameters' page ensure the 'Depth' is set to 0.0mm Incremental

The chamfer size is controlled from the 'Cut Parameters' page.

Green Tick to accept and generate the toolpath

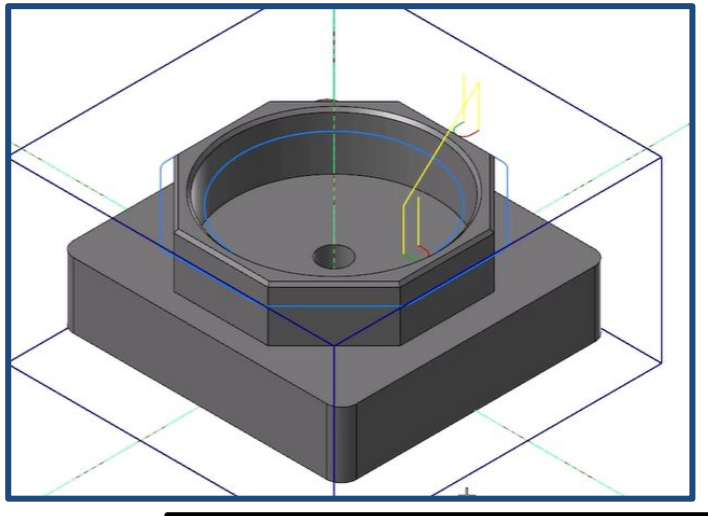

End of Session - Save Your Work